Industry: Health

MOBILE 360 UV-C

Ultraviolet Surface & Air Disinfection Systems

Direct action germicidal UV-C devices.

Application of direct action antibacterial lamps is one of the most effective method of disinfection. These devices produce UV-C radiation of wavelength 253.7 nm. This radiation reveals the strongest biocide characteristics and irreversibly deactivates bacteria, viruses, moulds, fungi and other microorganisms.

Applications: schools, hospitals, meeting rooms, restaurants, fitness rooms, gyms.

FEATURES

- Short-wave Germicidal Light
- Full Protection
- Delay Start
- Ozone & Chemical Free
- High Effective
- Remote Cotrol & Timer (10/20/30/40/50/60 minutes)
- Low Heat Output
- 1 Year warranty for UV-C Lamps
- 2 Years Warranty for Non-electric parts
- Portable – 4 wheels (standard) with wheel lock

BENEFITS

- You will get disinfected surfaces and clean air.
- You can easily turn on / off the equipment with the remote control,
- You can work in an environment free of harmful microorganisms,
- Eliminate the chances of getting sick.

ADVANTAGES

- Mobile UV system, can be easily moved
- Remote control
- Possibility to program the operating time of the equipment (10/20/30/40/50/60 minutes)

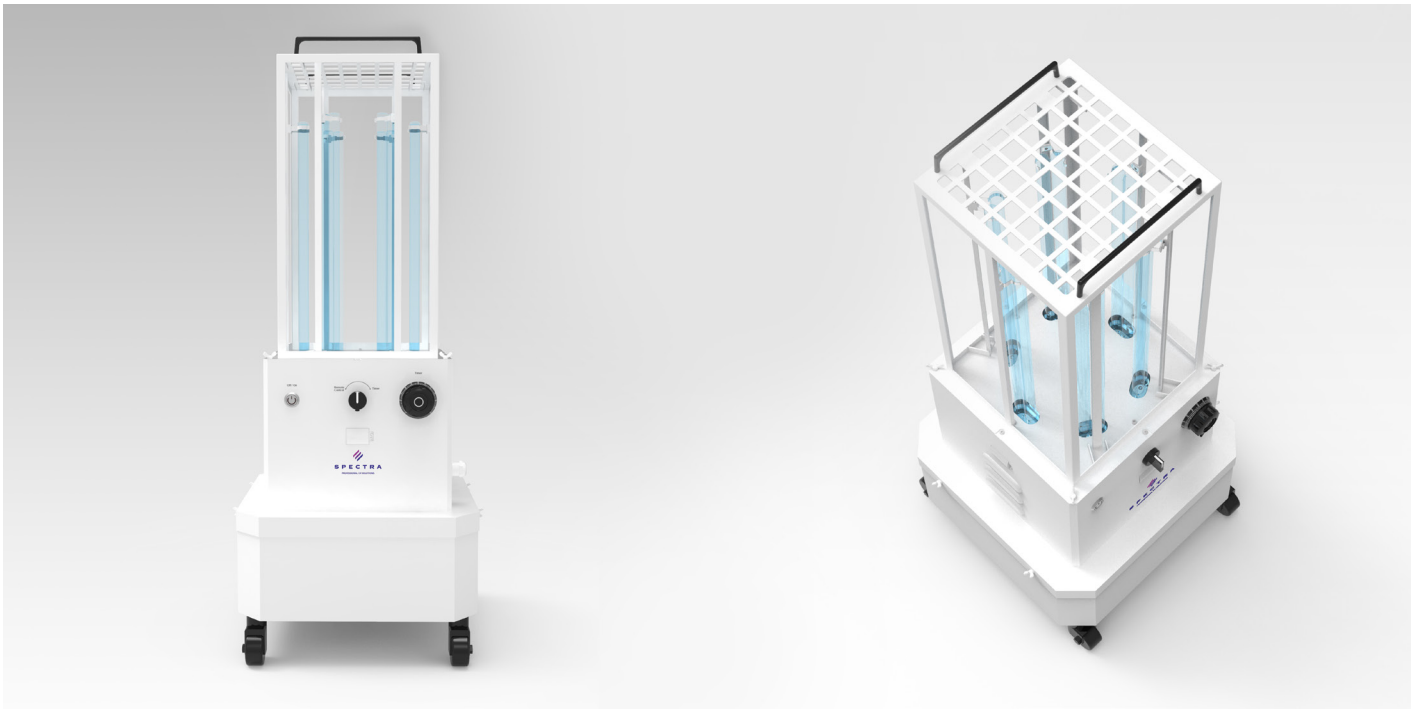

TECHNICAL SPECIFICATIONS

MODEL	MOBILE 360 UVC-72W			MOBILE 360 UVC-144W			MOBILE 360 UVC-216W		
POWER	72 W			144W			216W		
EFFECTIVE AREA OF THE LAMP	20 m²	30 m²	50 m²	30 m²	50 m²	100 m²	50 m²	100 m²	160 m²
TIME OF EXPOSURE	10 min	20 min	30 min	10 min	15 min	30 min	10 min	20 min	30 min
VOLTAGE	220-240V AC, 50/60Hz								
BEAM ANGLE	360°								
LAMPS QUANTITY	2			4			6		
UV OUTPUT	220 @ 254nm µW/cm² @1m			440 @ 254nm µW/cm² @1m			660 @ 254nm µW/cm² @1m		
LAMPS LIFESPAN	8000+ hours								
DIMENSIONS (WXLXH)	380 x 380 x 974 mm								
WEIGHT	10 Kg								

TECHNICAL DRAWINGS

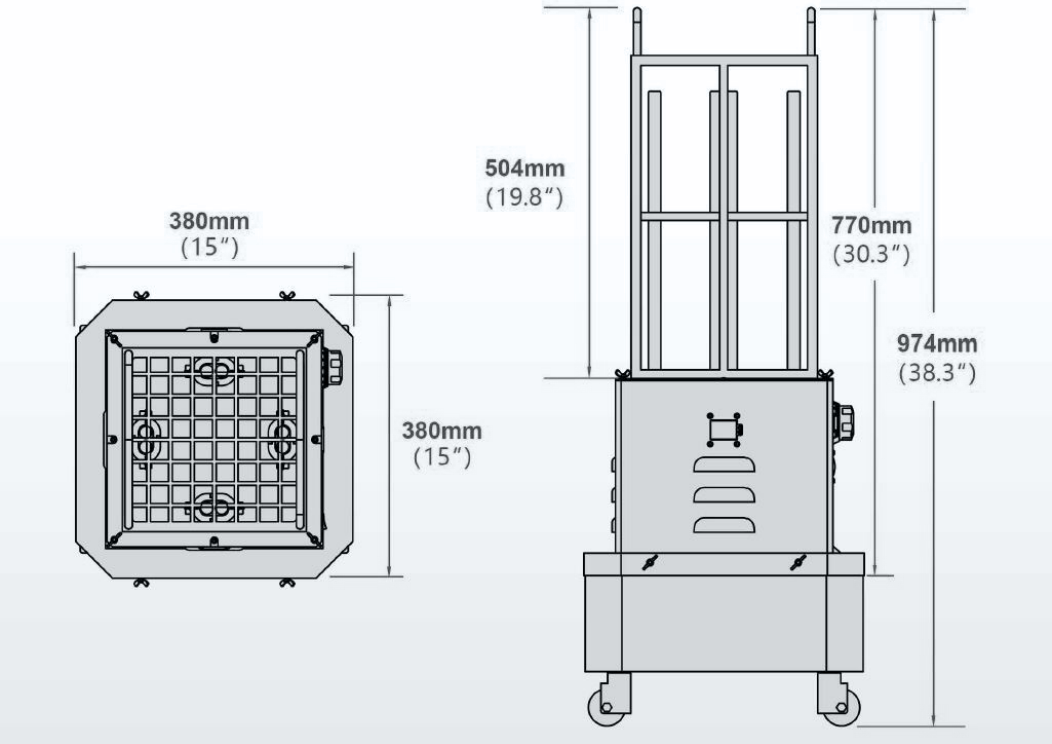

SPECTRA

PROFESSIONAL UV SOLUTIONS

Str. Zizinului, Nr. 110, 500407, Brașov, România
www.spectra.ro / contact@spectra.ro / (+40) 0770-187-379
SPECTRA is a trademark of AKRO